WD102-12

DRAG CHAIN SPROCKETS > WD102 Sprocket

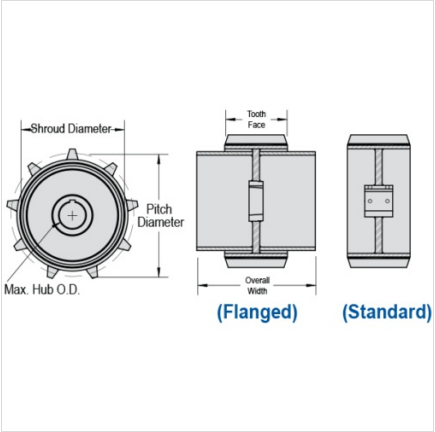

Part Number	Average Pitch	Number of Teeth	Pin Style	Pitch Diameter	Max. Bore	Shroud Diameter
WD102-12	5.000	12	Flanged & Standard	19.32	5 15/16	17.162

Part Number	Tooth Face
WD102-12	6 3/8

Questions about ordering? Call us!