WD120XHDSM

WELDED STEEL CHAIN > Welded Steel â€œSuper Macâ€ Drag Chain

Industry: *Mobile Wood Waste Recycling, Forest Products*

Using select grade alloy steels these heavy duty chains are manufactured in North America to high standards. Our unique barrel forming process ensures consistent quality, reducing potential rivet wear and providing high strength and long service life.

The Super Mac series chain features a formed barrel of heavy wall tubing for severe applications, ideal for extra heavy loads associated with hog conveyors or "Load" chip dumping.

All heat treating and attachment options are available, as well as reverse barrel design.

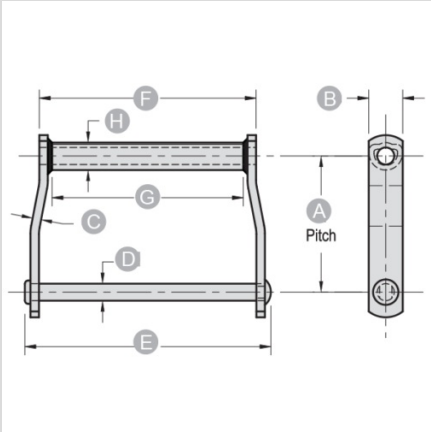

NOTE: All dimensions shown in inches unless noted otherwise. *WDH denotes Heat-Treated

Part Number	Average Pitch	Ultimate Strength (lbs)	WH* Ultimate Strength (lbs)	Sidebar Height	Sidebar Thickness	Pin Diameter
	A			B	C	D
WD120XHDSM	6.000	125,000	150,000	2.000	5/8	1.000

Part Number	Approx. Overall Width	Length of Bearing	Max. Sprocket Thickness	Links per Foot	Average Weight per Ft. (lbs)
	E	F	G		
WD120XHDSM	12 3/4	10 1/2	8 3/4	2.000	24.000
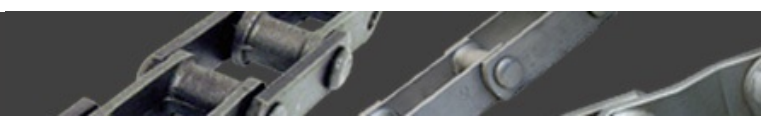
Questions about ordering? Call us!